FOXY CARBON XR, CARBON/YELLOW, 2021

obj. č: 010.21089

Doporučená cena
220.999 Kč

Technické specifikace

barva rámečku carbon/yellow	**vyráběné velikosti** S 380mm / M 420mm / L 470mm / XL 510mm
hmotnost 13,3 Kg	**rám** Foxy 29 Stealth Air full Carbon, Zero Suspension System, 150mm travel, Forward Geometry, aluminium CSC upper link with carbon bridge, Boost 12x148mm rear axle, tapered head tube, 73mm BSA bottom bracket, dedicated 1x drivetrain design, HHG internal cable routing, Enduro MAX sealed bearings, shock mudguard, ISCG 05, custom frame protectors. Geometry kit included: steering cups: +/- 1
vidlice Öhlins RXF 36 M.2 29, 170mm, TTX18 Twin Tube cartridge, tapered steerer tube, Boost 15x110mm axle, offset 44mm. Settings: high speed compression lever with climb mode, low-speed compression, rebound, air preload, ramp chamber	**hlavové složení** Onoff Titan tapered for 1-1/8 to 1-1/2 head tube, ACB sealed bearings, top 41.8x30.5x8x45x45, bottom 51.9x40x8x45x45
přehazovačka Sram X01 Eagle, Type 3 roller bearing clutch, cage lock, 1x12s, X-Actuation 1:1	**řazení** Sram Trigger X01 Eagle, 12s, X-Actuation 1:1
brzdové páčky Sram G2 RSC, SwingLink and lever pivot bearings, tools-free reach and contact point adjust	**kliky** Sram X01 Carbon Eagle, Boost, DUB axle, Direct mount chain ring, S/M size: 170mm, L/XL size: 175mm
středové složení Sram DUB BSA, sealed bearings, 73mm	**řidítka** Onoff Krypton Carbon 0.5, rise: 12,5mm, width: 780mm, 9 backsweep, 5 upsweep, 31,8mm barbore Onoff Desert, 1lock-on, 135mm, sizes: S/M L/XL
představec Onoff Krypton FG 30mm, 6061 forged alloy, 31,8mm barbore	**sedlovka** Onoff Pija dropper internal, diameter 31.6mm, S size: 337x100mm, M size 387x125mm, L size: 425x150mm, XL size: 465x170mm
sedlo SDG BEL-AIR 3.0, EVA foam, steel rails	**náboj přední** DT 240, Boost 15x110mm, IS 6 bolts
náboj zadní DT 240, Boost 12x148mm, 36T Ratchet EXP system, IS 6 bolts, XD freehub	**řetěz** Sram GX Eagle, 12s, Powerlock
kazeta Sram XG-1295, 10-52T, 12s	**dráty** DT Competition, straightpull
ráfky DT Swiss EXC1501 Carbon Spline 29, 30mm internal width, hookless, tubeless ready, 28 spokes	**pláště** Maxxis Minion DHF 29x2.5 WT, tubeless ready, 3C MAXX TERRA compound, EXO+ protection, 120TPI, folding bead

obj.c. 010.21089	**tlumič** Öhlins TTX Air 205x62.5mm. Settings: high speed compression lever with climb mode, low-speed compression, rebound, air preload. Trunnion top mount, 22.2x10mm bottom bushings
přední brzda Sram G2 RSC, 4-piston caliper, Centerline 200mm IS 6 bolts one-piece rotor, steel-backed organic pads	**zadní brzda** Sram G2 RSC, 4-piston caliper, Centerline 180mm IS 6 bolts one-piece rotor, steel-backed organic pads
omotávka Maxxis Minion DHR II 29x2.4 WT, tubeless ready, 3C MAXX TERRA compound, EXO+ protection, 120TPI, folding bead	**nastavení tlumiče** C20 compression, R35 rebound
převodník 32T, CNC-machined alloy, X-SYNC 2	**patka k přehazovačce** Mondraker M068

Geometrie

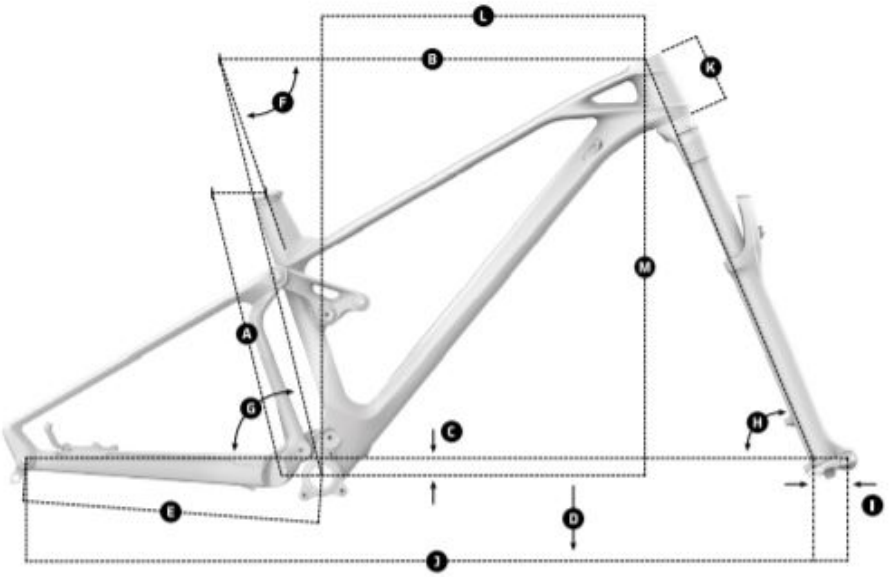

GEOMETRY

Size	S	M	L	XL
A Seat Tube Length	380 mm	420 mm	470 mm	510 mm
B Top Tube Length	616 mm	639 mm	664 mm	688 mm
C Bottom Bracket Drop	-14 mm	-14 mm	-14 mm	-14 mm
D Bottom Bracket Height	360 mm	360 mm	360 mm	360 mm
E Chainstay Legth	435 mm	435 mm	435 mm	435 mm
F Seat Tube Angle, Actual	69.5°	69.5°	69.5°	69.5°
G Seat Tube Angle, Effective	74.5°	74.5°	74.5°	74.5°
H Head Tube Angle	65.5°	65.5°	65.5°	65.5°
I Fork Offset	44 mm	44 mm	44 mm	44 mm
J Wheelbase	1200 mm	1220 mm	1248 mm	1268 mm
K Head Tube Length	100 mm	110 mm	130 mm	130 mm
L Reach	440 mm	460 mm	480 mm	500 mm
M Stack	622 mm	622 mm	640 mm	640 mm